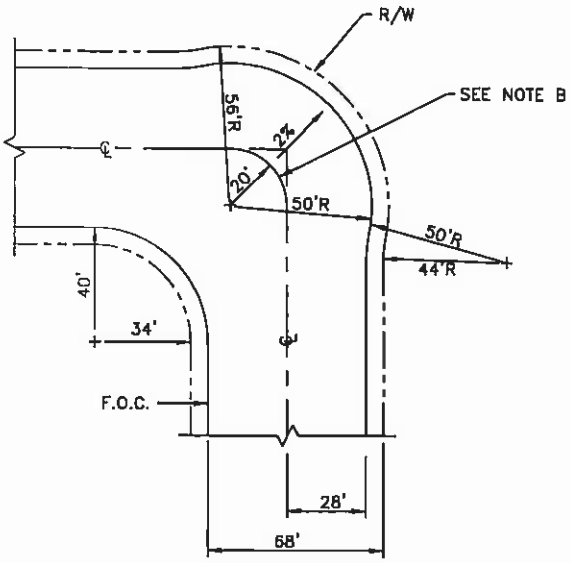

STANDARD EXPANDED CORNER

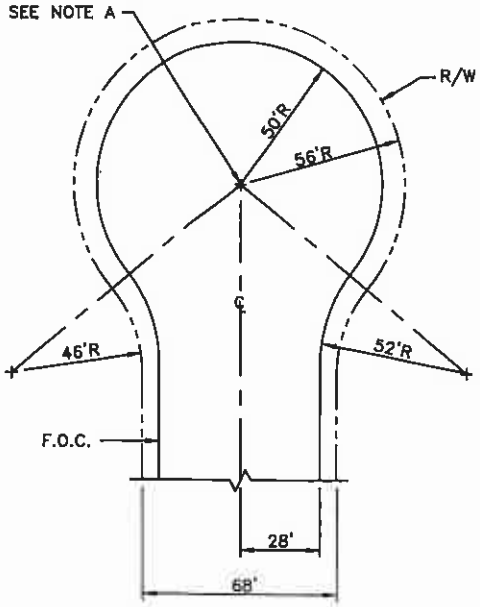

STANDARD CUL-DE-SAC

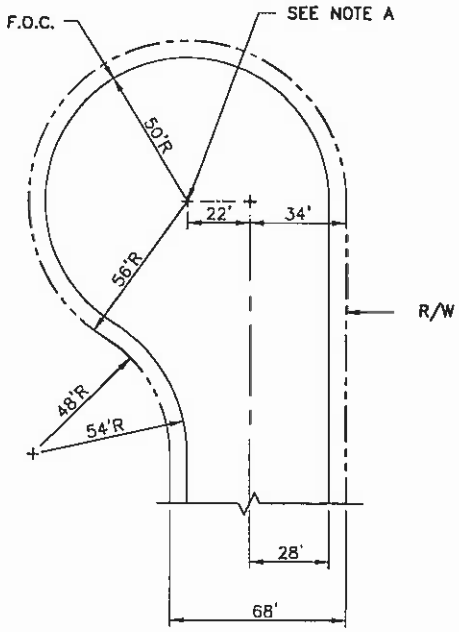

STANDARD CUL-DE-SAC (OFFSET)

NOTES:

A. CROWN TO BE 1.20 FEET ABOVE FLOW LINE OF GUTTER AT ITS HIGHEST POINT.

B. ON EXPANDED CORNERS, CENTERLINE CROWN SHALL BE EQUALIZED BETWEEN LIPS OF GUTTER IN THE KNUCKLE.

THE CITY OF WEST SACRAMENTO – STANDARD DETAIL

APPROVED BY: CITY ENGINEER	C-38733 P.E. NO.	3/31/05 DATE	TITLE: COMM. & INDUST. CUL-DE-SACS & EXP. CORNER COLLECTOR SOUTHPORT
REVISION:			STANDARD DETAIL #: 225
REVISION:			
REVISION:			
REVISION:			

THE CITY OF WEST SACRAMENTO EST. 1987

DWG\STAN\NEW#\225.DWG 5/22/01